BSVillage.com
PISCINE - WELLNESS - OUTDOOR

MANUALE di MONTAGGIO

Pergola Bioclimatica in alluminio

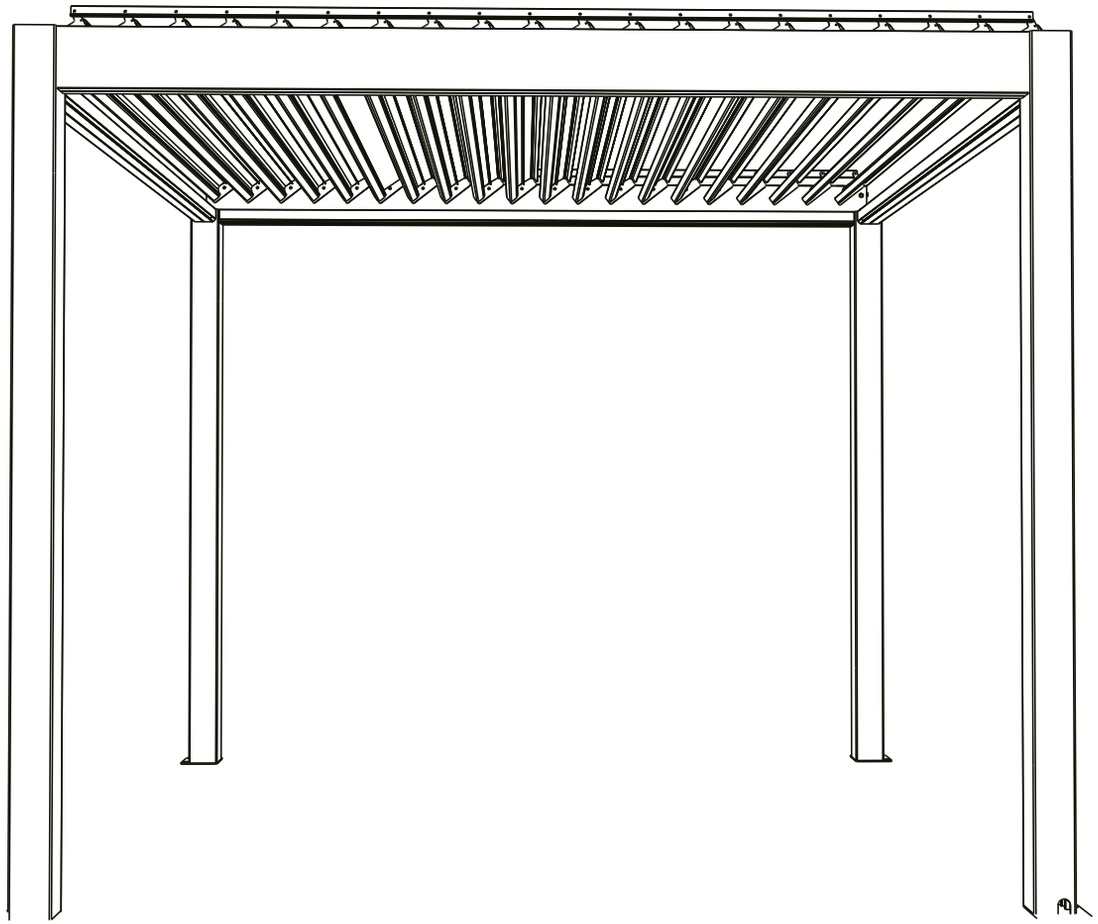

www.bsvillage.com

Foreword

Dear Customer:

Thank you for choosing our louver pergola. Please read the assembly instructions before installation and use.

1.Three people at least are required for installatio;
2.If there is no concrete plate on the ground, it is recommended to make a concrete plate at each column;
3.After the pergola is assembled, measure the levelness and diagonal line with a level and tape measure to ensure the pergola is smooth;
4.Do not install a pergola when you find parts damaged or missing;
5.Wear protective clothing during installation, including safety glasses, helmet and gloves;
6.Be careful when using sharp tools;
7.Keep children and pets away from the work area during assembly and adjustment, and keep all plastic bags out of reach of chil dren;
8.No one is allowed to climb the pergola, Do not hang anything on the louver.
9.It is strictly prohibited to install a canopy in bad weather conditions such as rain, rain and snow.
10.The awning column must pe positioned and fixed on the plane, and no one should lean on the column during the assembly stage.
11.The film of the profile is used to protect the profile and must be removed after installation.
12.Do not stand near the pergola during a storm or typhoon.
13.Pergola should not be installed under the tree.Regularly clean the louvers , snow, or other objects.
Warning: Make sure the louvers are open when it's stroke and strong winds.

About cleaning

The surface must be cleaned annual, to maintain its original beauty.
When cleaning the blind, do not use a cleaning cloth, cream, cream, abrasive, wire ball into a color cloth, Recommended: soft s ponge, soft sand cloth, cotton velvet,cotton or non-woven (white only).Do not use acidic or alkaline cleaning products such as corrosion.It is recommended to use PH neutral de tergent and water to clean, and wipe dry with a cloth. When using high-pressure equipment for cleaning, the same precautions must be taken and the distance, nozzle type, water temperature and water pressure when cleaning the blind must be considered.

Use reminder:

After installation, check whether the screw is tight.Remember to check the screw at least once a year. In the case of forecast ing snow, hail or wind,the blind blade needs to be opened.tis prohilbited to use the blind in the case of frost orsnow, please take ofthe blade of the blind when snow.Checkthe accessries regularyto ensure thatthe acesories or other parts are not damaged. Clean the leaves and other debris on the awning regularly to prevent sewer blockage.

Warm reminder:

When typhoon or other bad weather, should not be in the gazebo activities.
The product damage caused by natural disasters or human activities is not covered by the warranty.

Accessories pictures

No.	Post	No.	Beam(Next to C，transformer /cable inside)
A	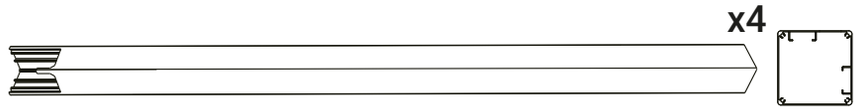 x4	B	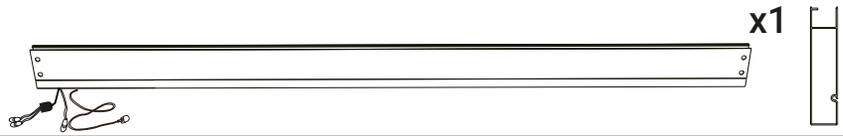 x1
No.	Beam(Motor inside)	No.	Beam(Normal)
C	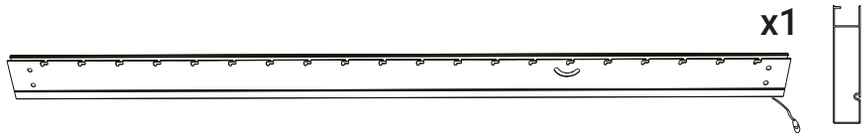 x1	D	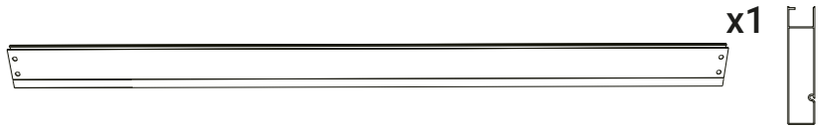 x1
No.	Beam(Opposite C)	No.	Gutter with LED(pair C /E)
E	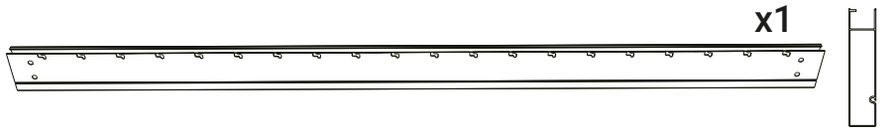 x1	F	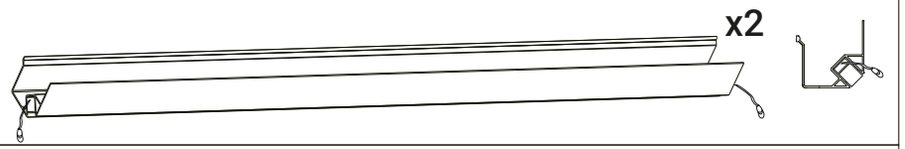 x2
No.	Gutter with LED(pair B/D)	No.	Louver(Motor drive)
G	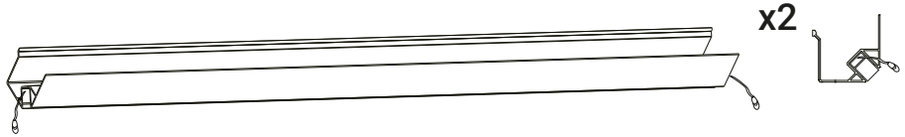 x2	H	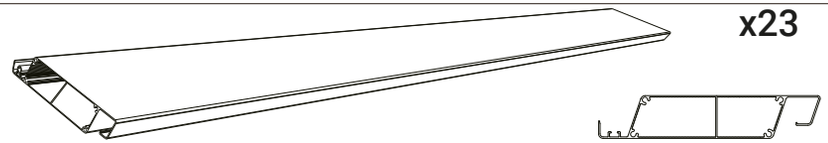 x23
No.	Control rob	No.	Beam cover(pair C / E)
I	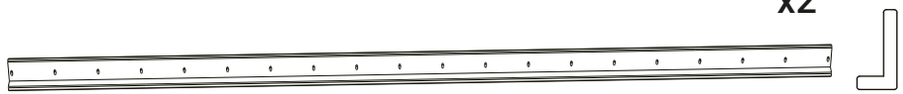 x2	J	x2
No.	Beam cover(pair B /D)		
K	x2		

Accessories pictures

①Post plate	②Post bottom cover	③Louver cover（right）	④Louver cover（left）	⑤Louver cover（Motor）
x4 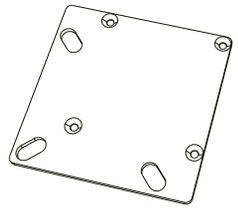	x4 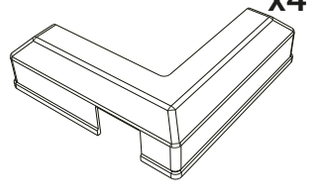	x23 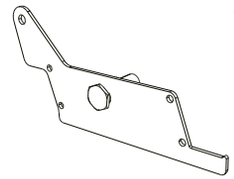	x22 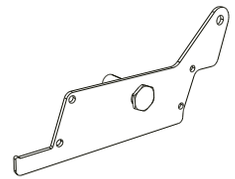	x1 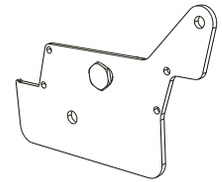
⑥M4.2x19 Drilling Screws	⑦M6x30mm Drilling Screws	⑧M10x6 Hex nut	⑨M4x19 Hexagon socket screw	⑩Gasket
x93 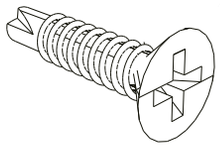	x16 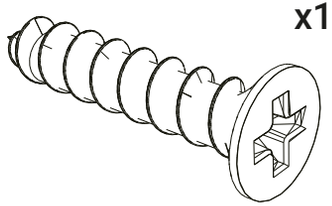	x46 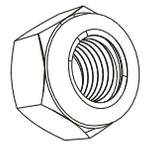	x46 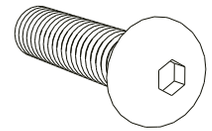	x46 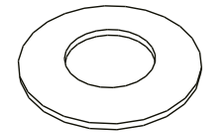
⑪ M8x22 Hexagon socket screw	⑫ Expansion bolt	⑬Post up plate	⑭M13x16 Drilling Screws	Hexagonal wrench
x8 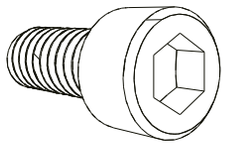	x12 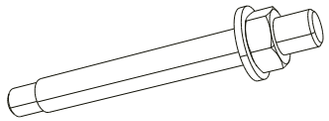	x4 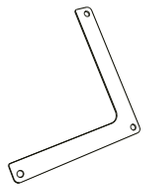	x12 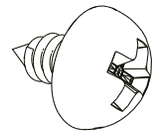	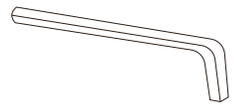
Ladder	Spanner	Cable drilling tool	Workers	
x2 >1.5m	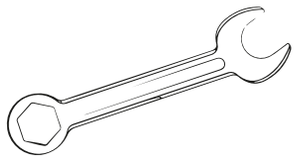	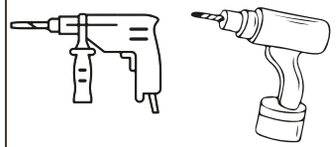	>3 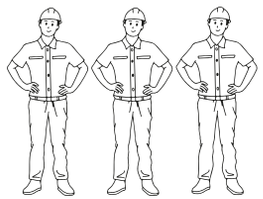	

Step 1： Install Post

①	⑦
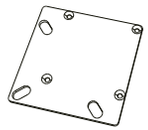 x3	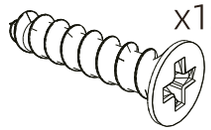 x12

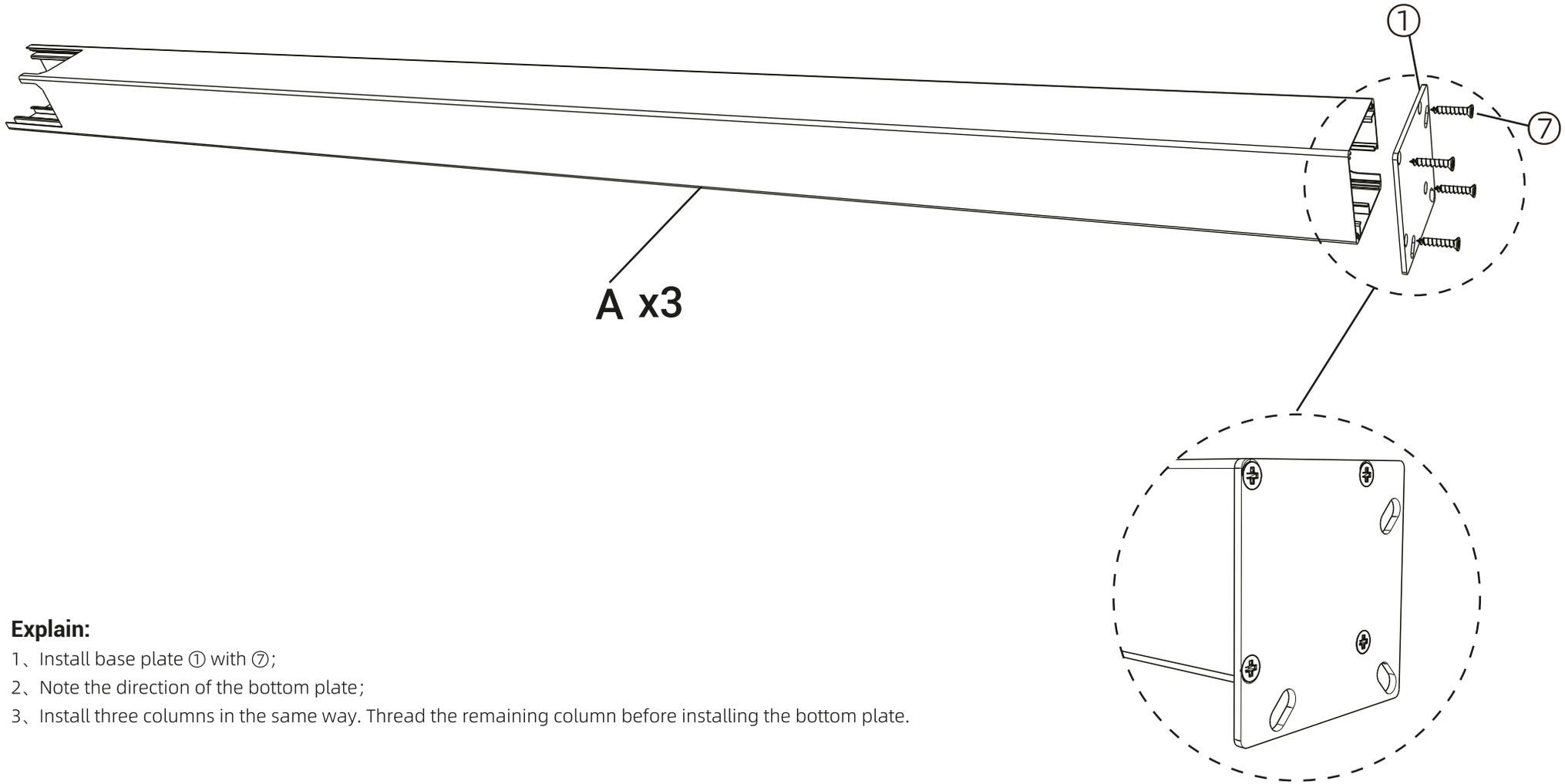

Explain:

1、Install base plate ① with ⑦;

2、Note the direction of the bottom plate;

3、Install three columns in the same way. Thread the remaining column before installing the bottom plate.

Step 2： Install Beam B and the Post

①	⑦	⑫
x1	x4	x2

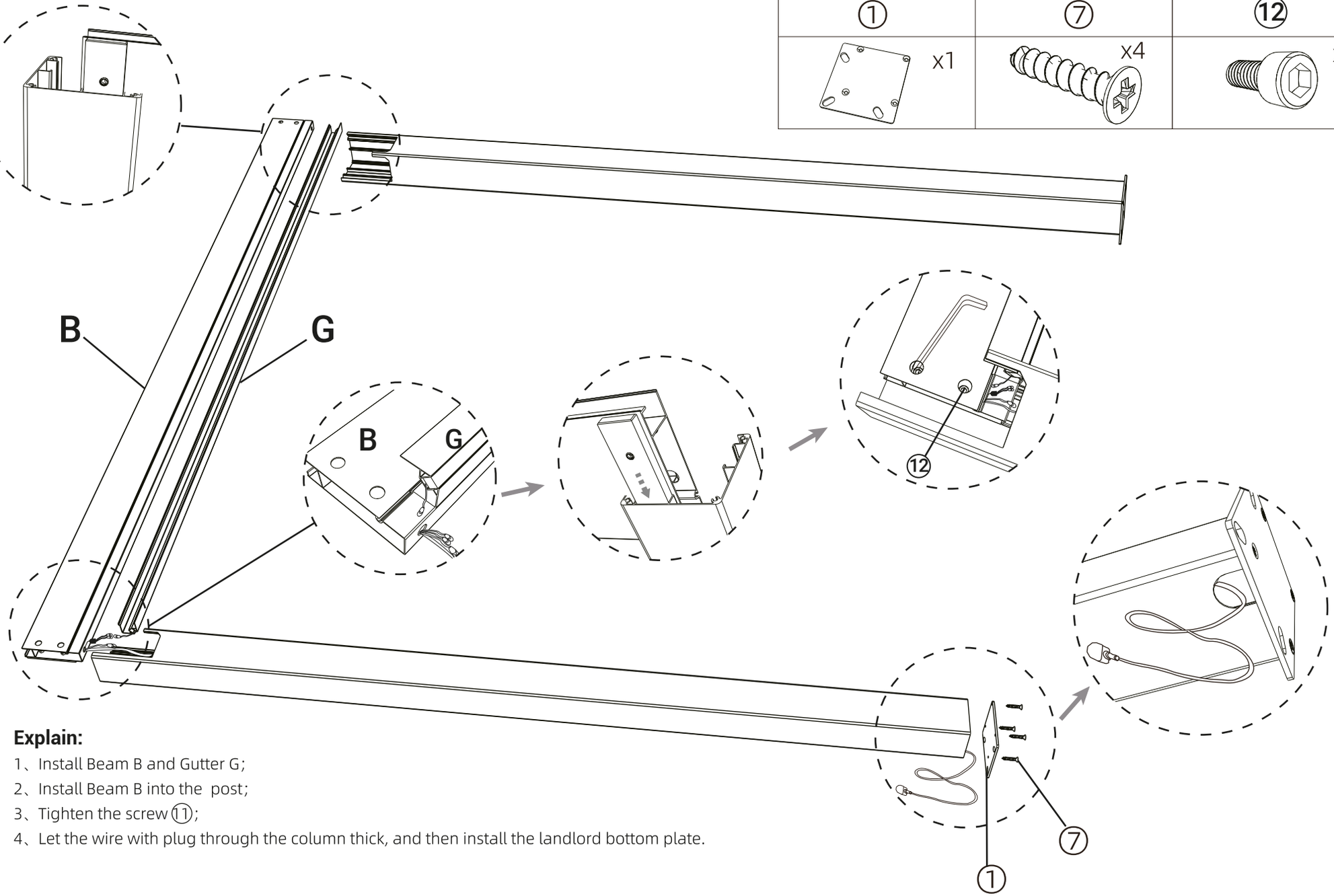

Explain:

1、Install Beam B and Gutter G;

2、Install Beam B into the post;

3、Tighten the screw ⑪;

4、Let the wire with plug through the column thick, and then install the landlord bottom plate.

Step 3： Install Beam C and E

Explain:

1、Install Beam and gutter C & F ,E & F ;

2、Install Beam C and E into Beam B ;

3、Tighten the screw .

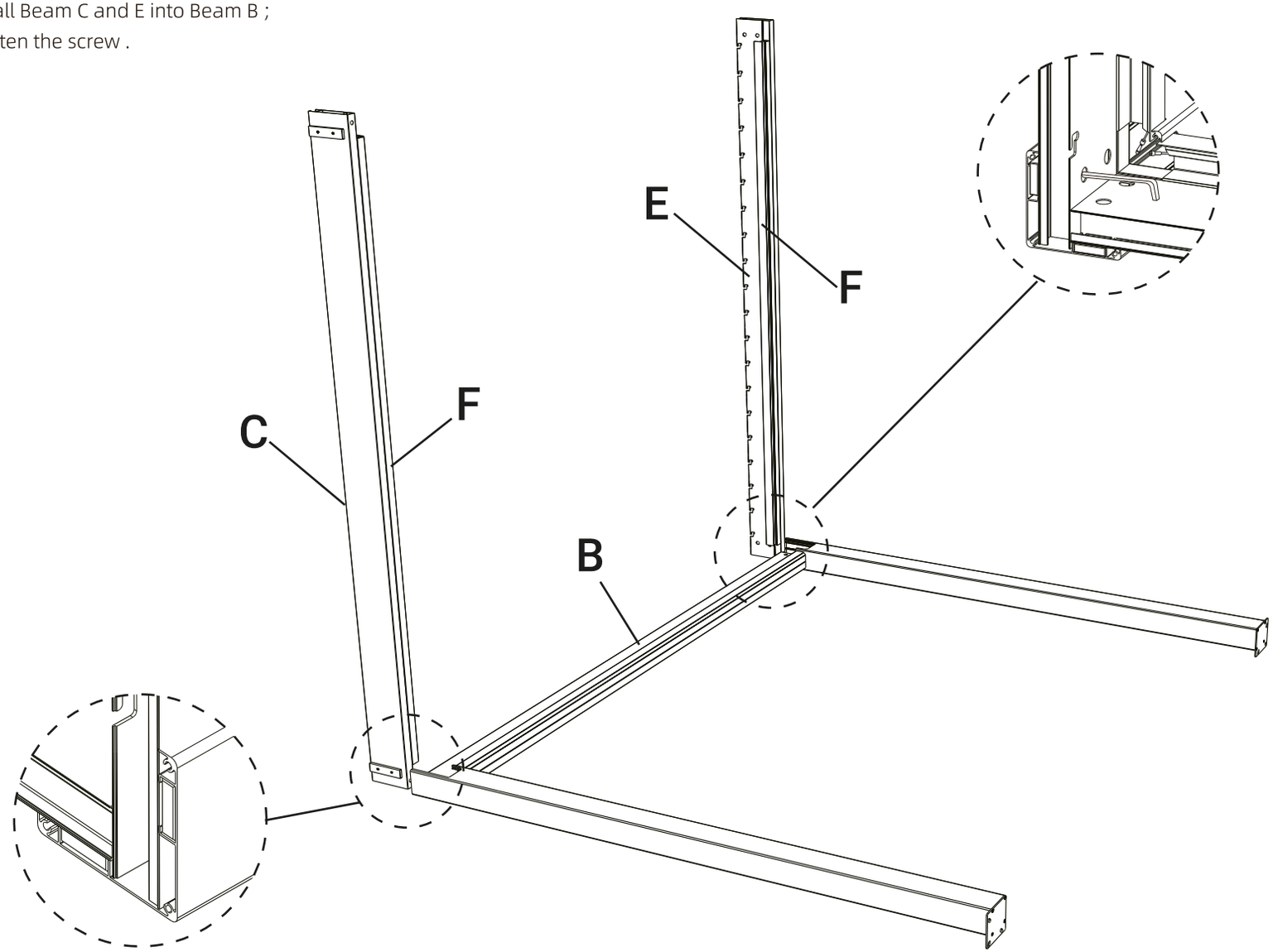

Step 4 : Install Beam D

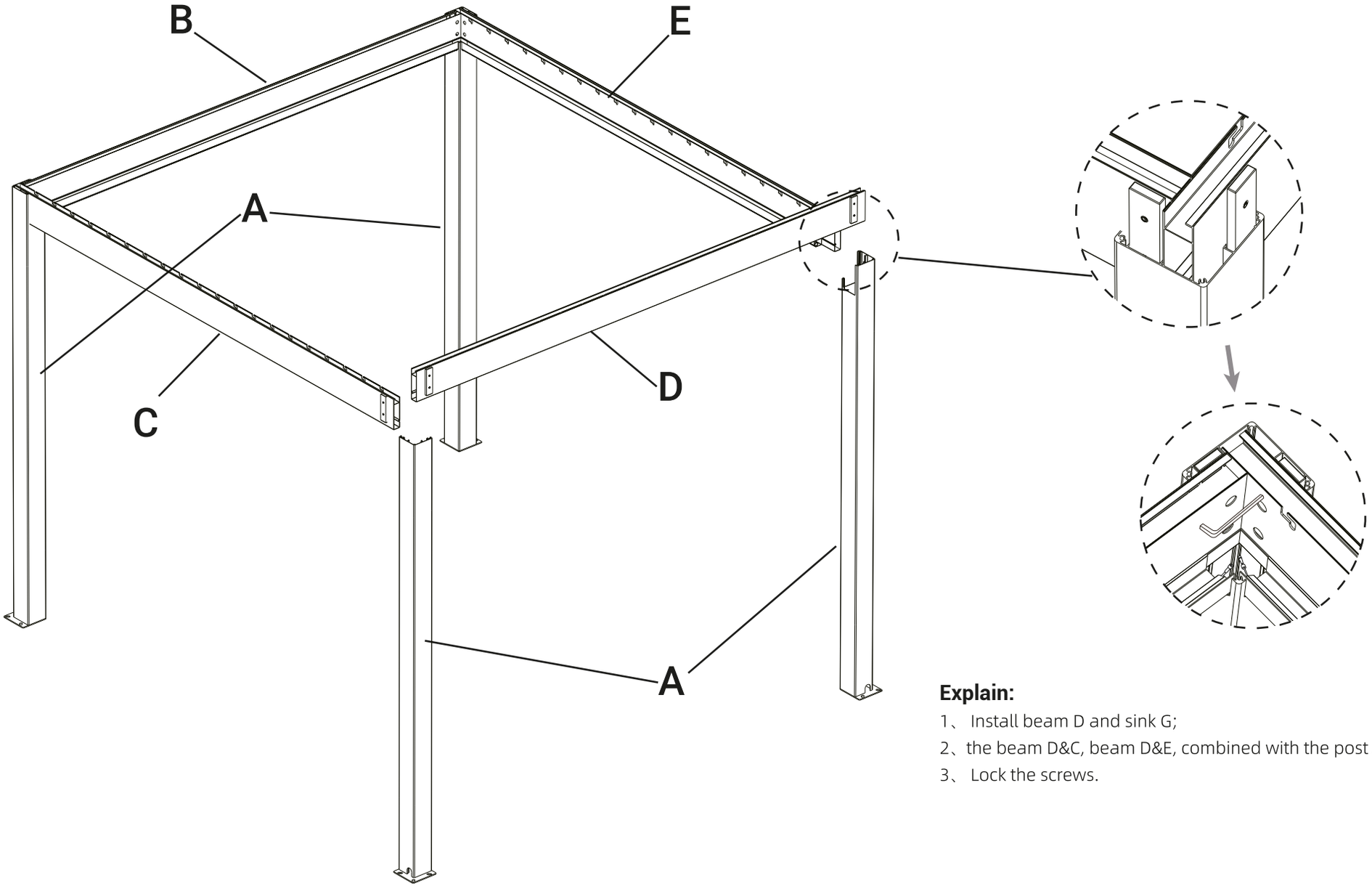

Explain:

1、 Install beam D and sink G;

2、the beam D&C, beam D&E, combined with the post A ;

3、 Lock the screws.

Step 5： Wire connection

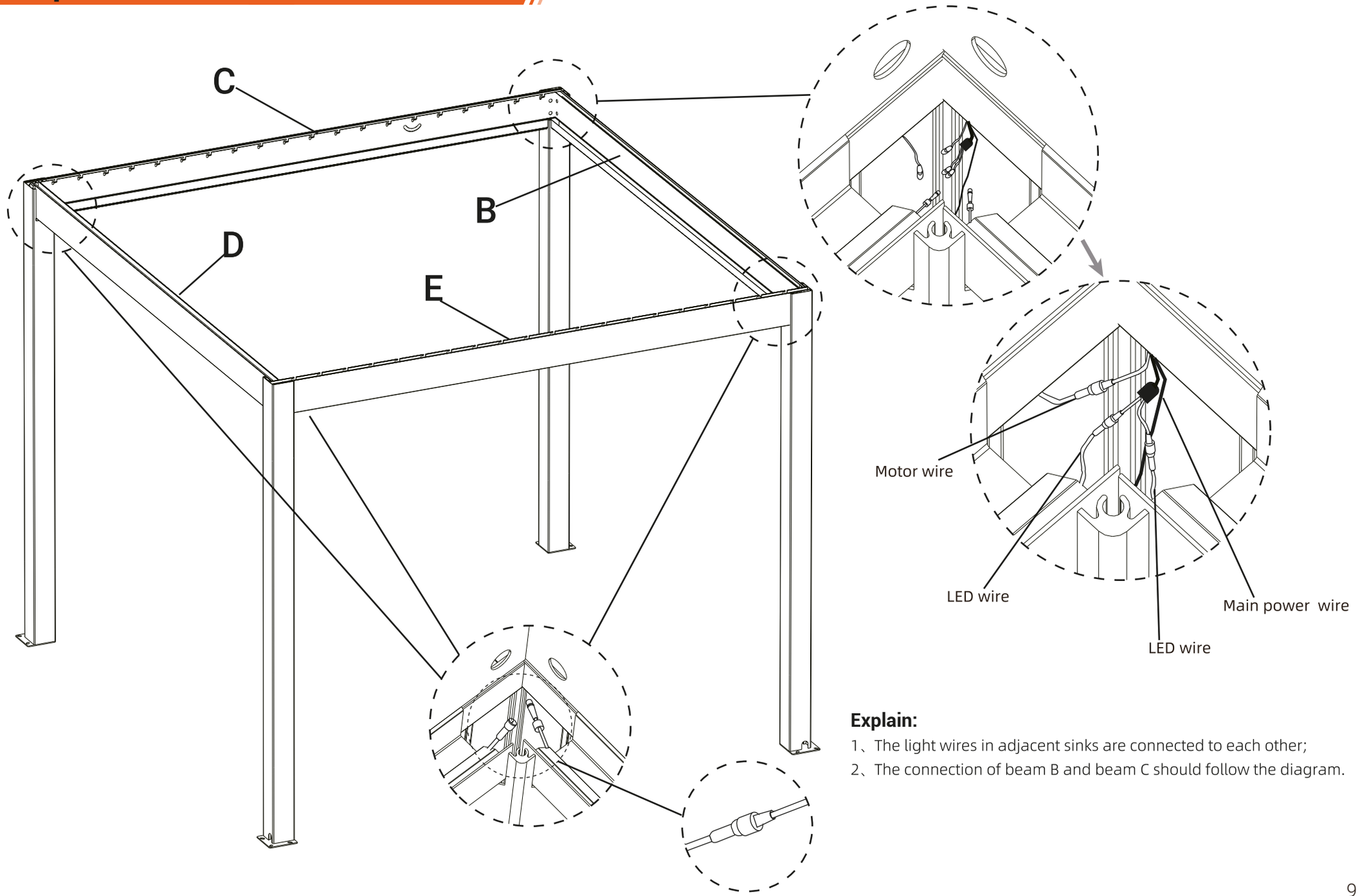

Explain:

1、The light wires in adjacent sinks are connected to each other;

2、The connection of beam B and beam C should follow the diagram.

Step 6 : Install Louver covers

⑥	③	④	⑤
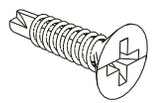 x1	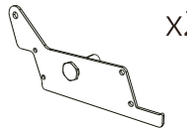 x23	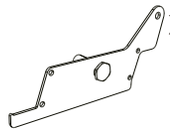 x22	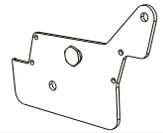 x1

Explain:

1、When installing louver end covers, distinguish the direction of the louver end covers ;

2、Secure the end cap with screws.

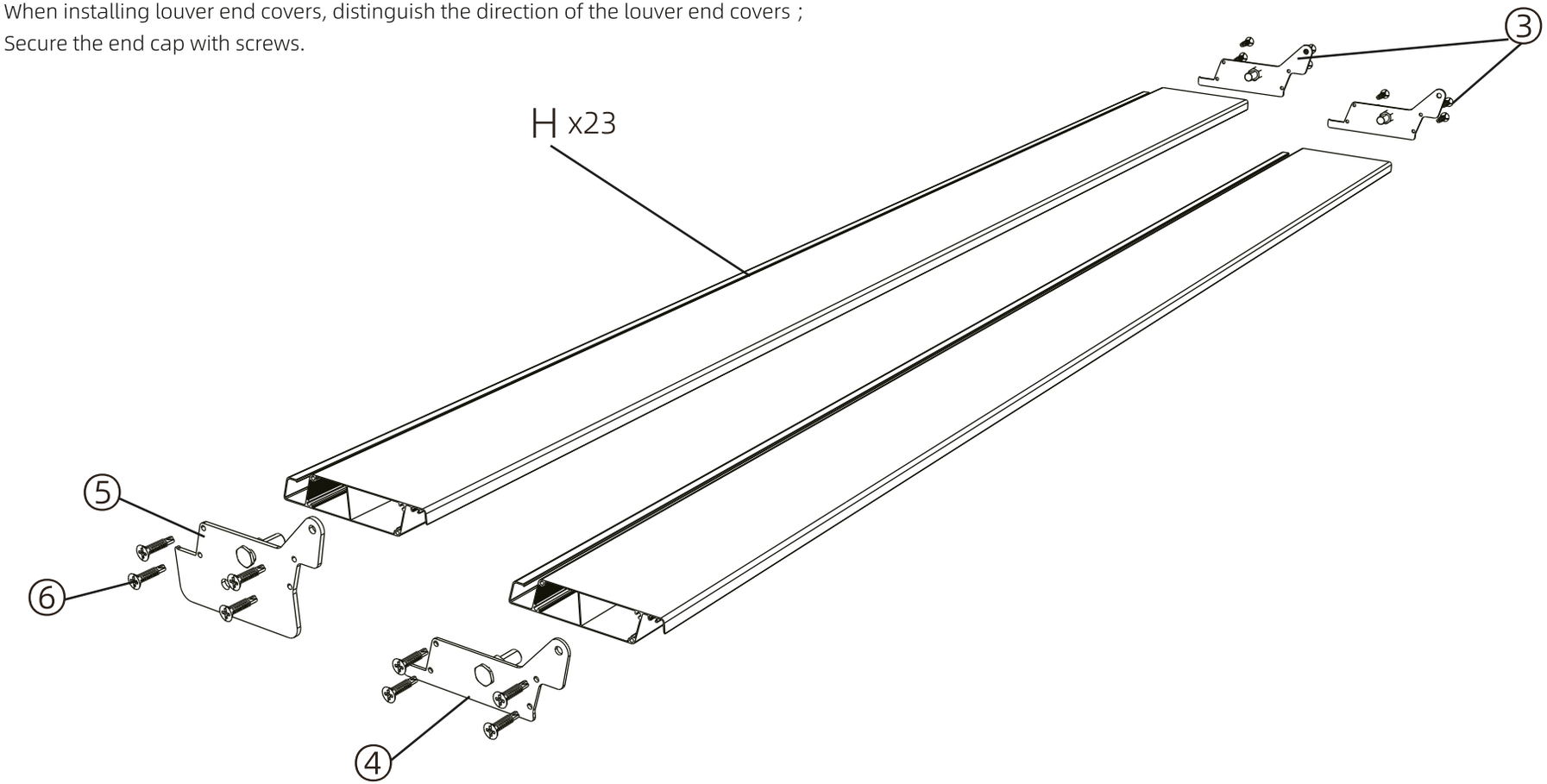

Step 7 : Install Louver

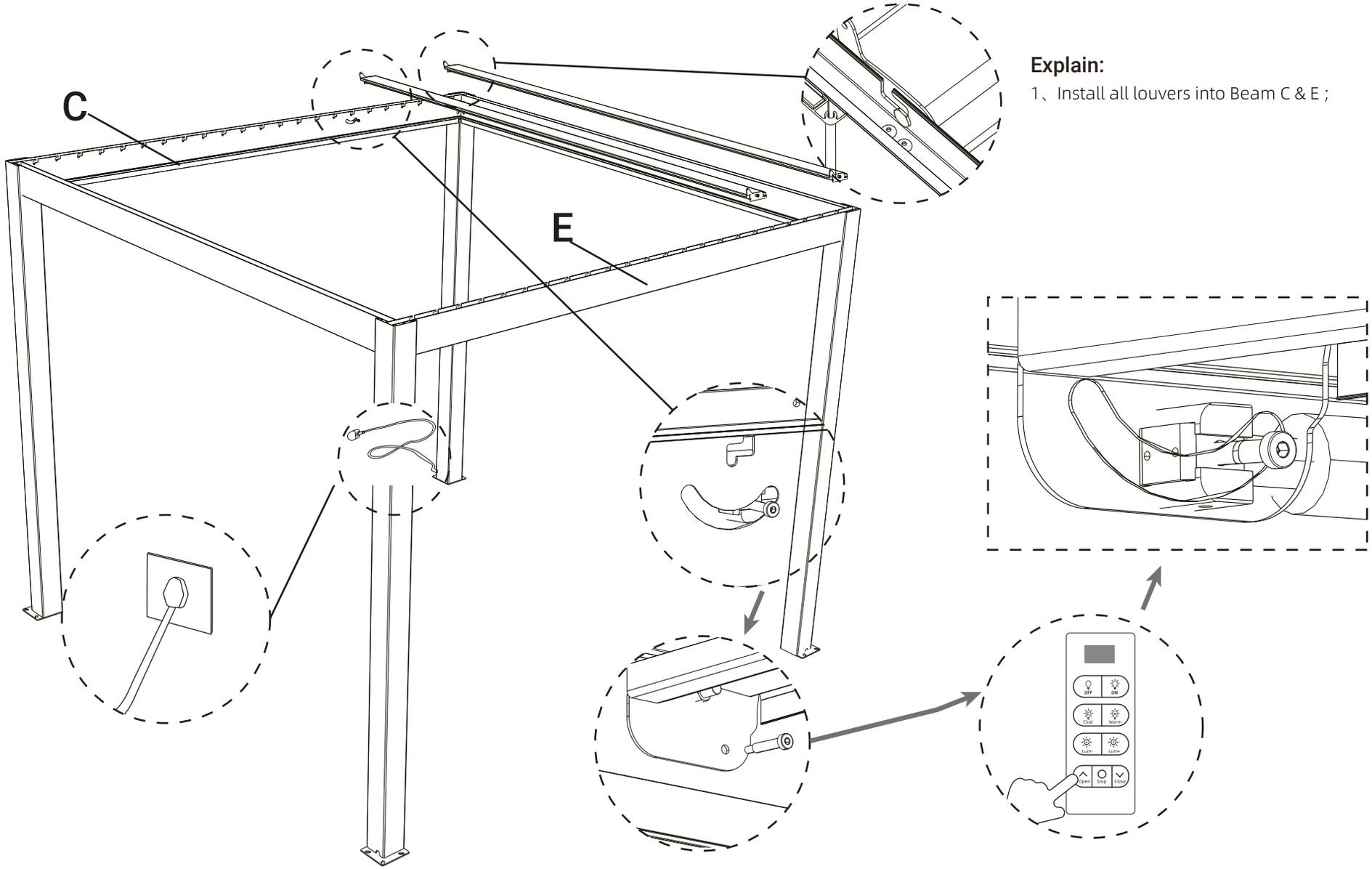

Explain:

1、Install all louvers into Beam C & E ;

Explain:

1、The Motor Louver should install on the right place (No. 5 position);

2、Power on → Unscrew the motor→install the Motor Louver→press remote control open →tighten the screw.

Step 9 : Install Control rob

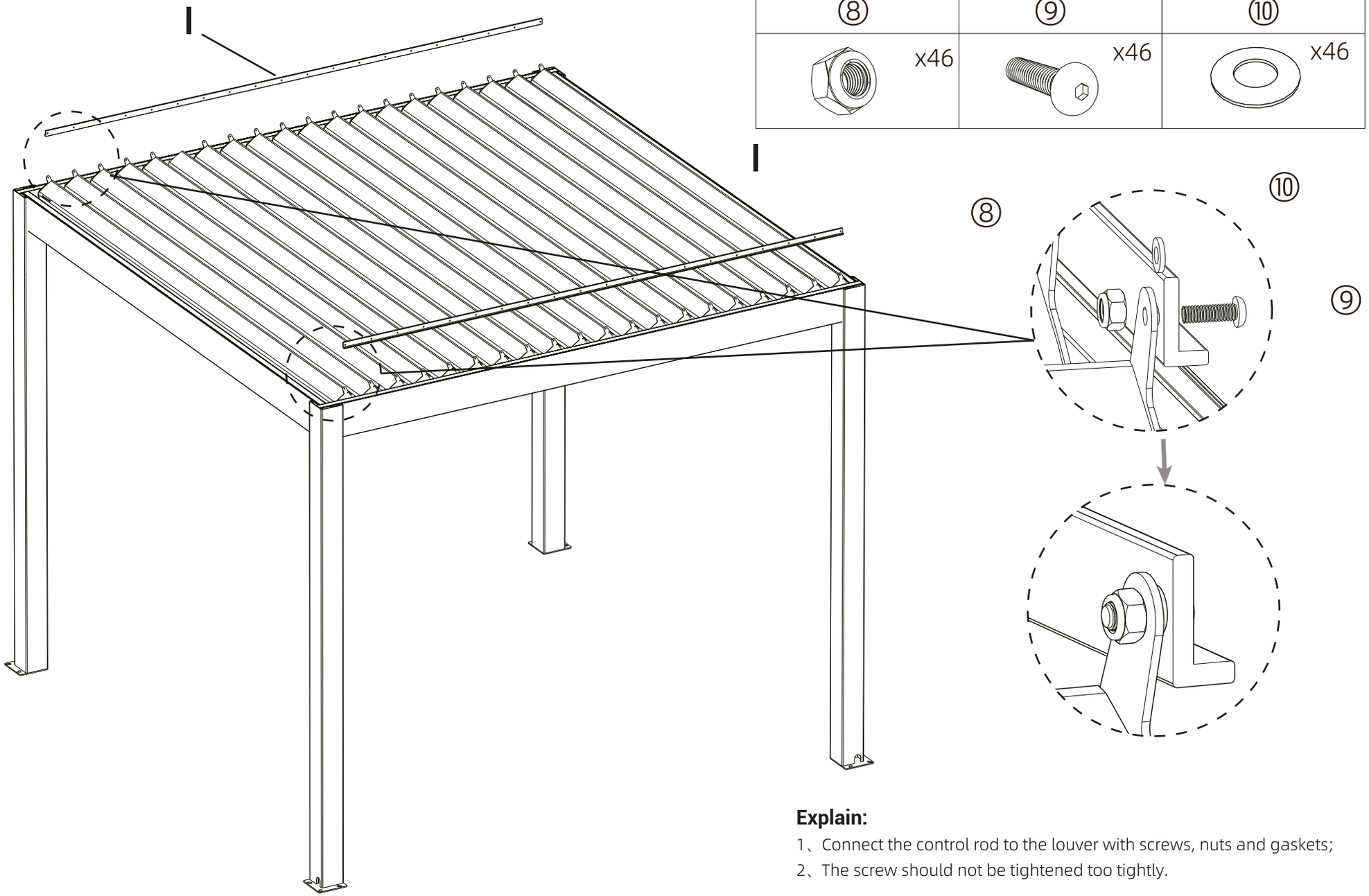

Explain:

1、Connect the control rod to the louver with screws, nuts and gaskets;

2、The screw should not be tightened too tightly.

Step 10 : Install Beam cover and Post up plate

⑥	⑬	⑭
x12	x4	x12

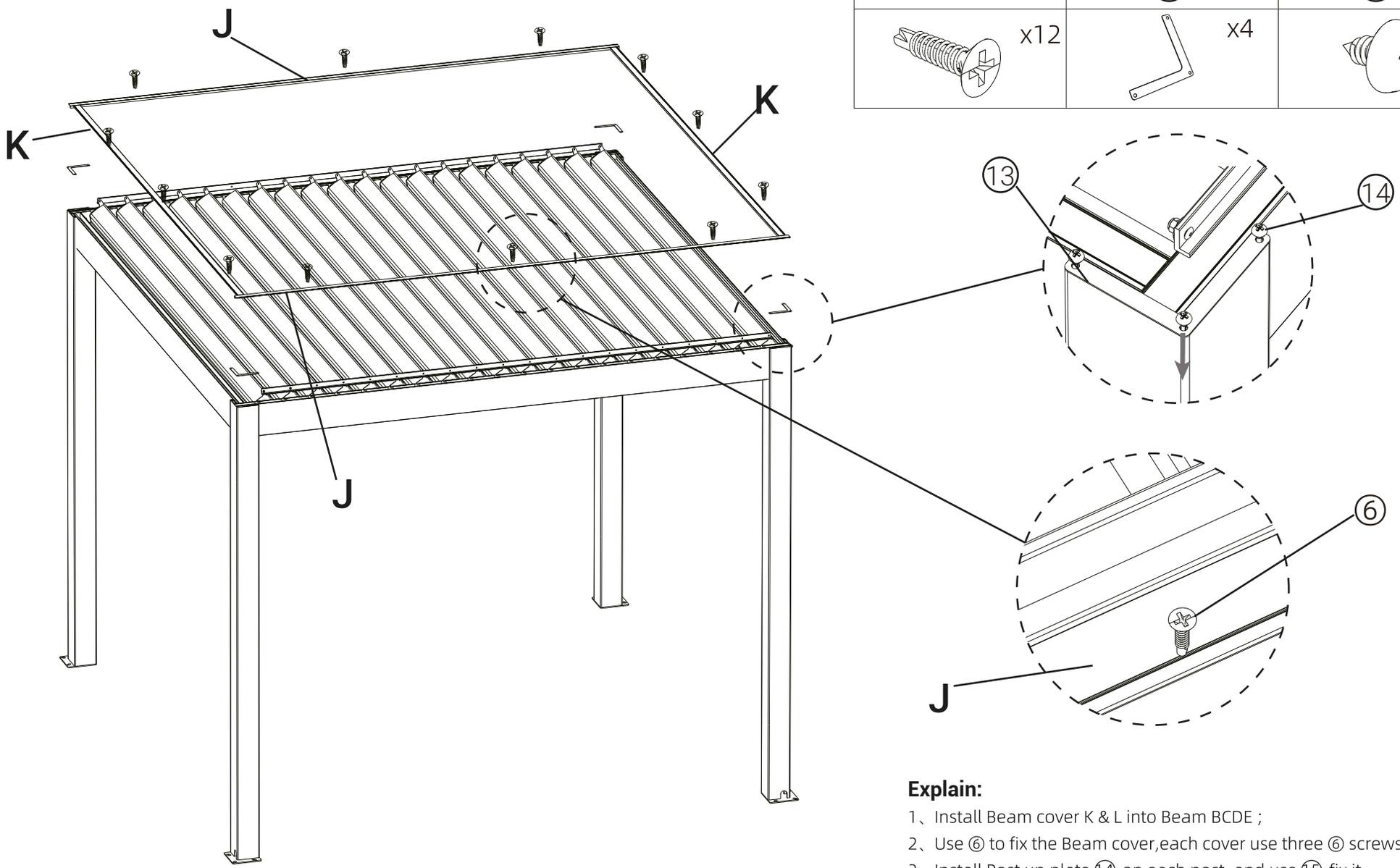

Explain:

1、Install Beam cover K & L into Beam BCDE ;

2、Use ⑥ to fix the Beam cover,each cover use three ⑥ screws;

3、Install Post up plate ⑭ on each post ,and use ⑮ fix it.

Step 11 : Fix pergola

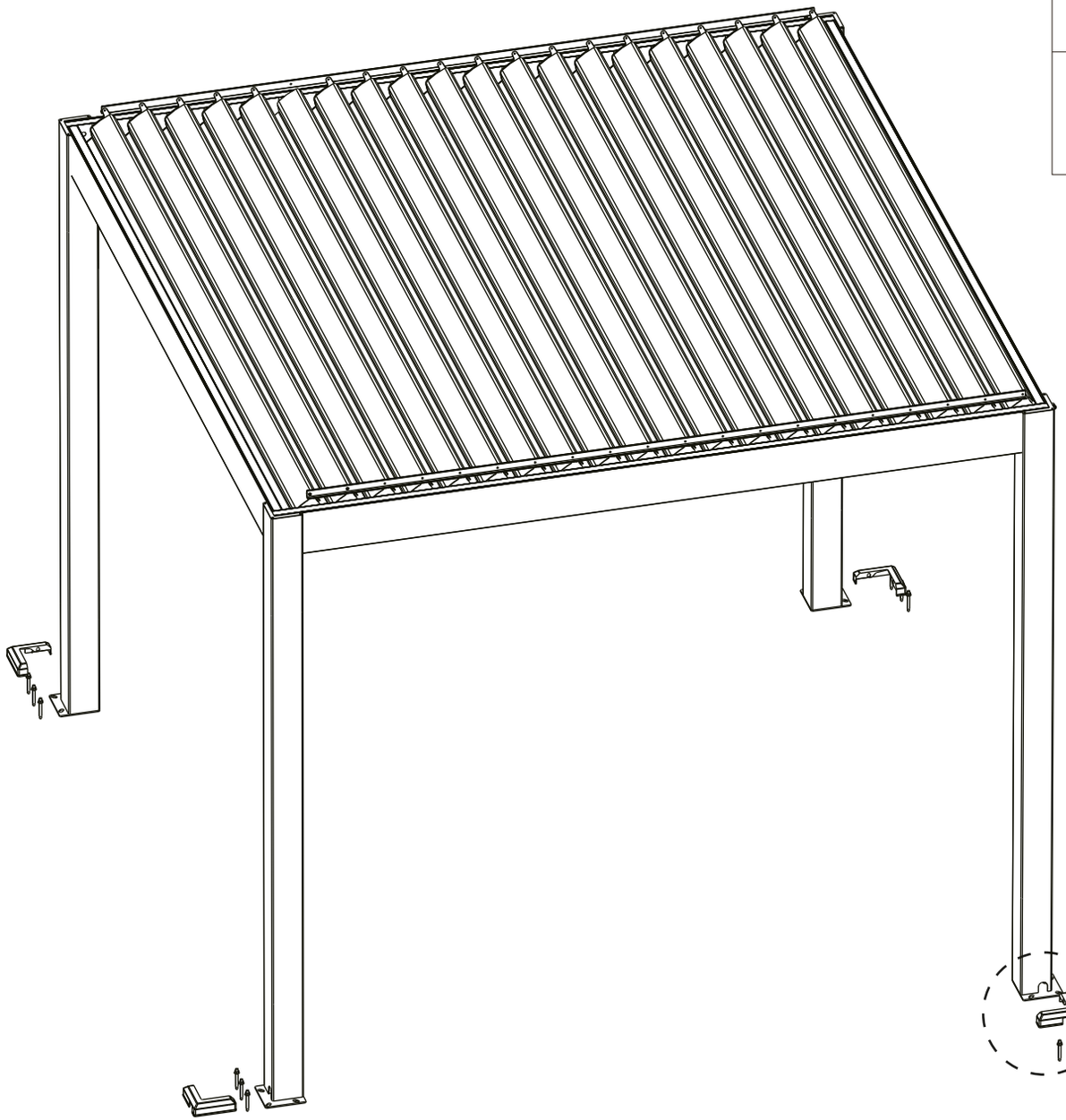

⑫	②
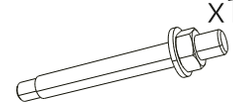 x12	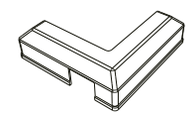 x4

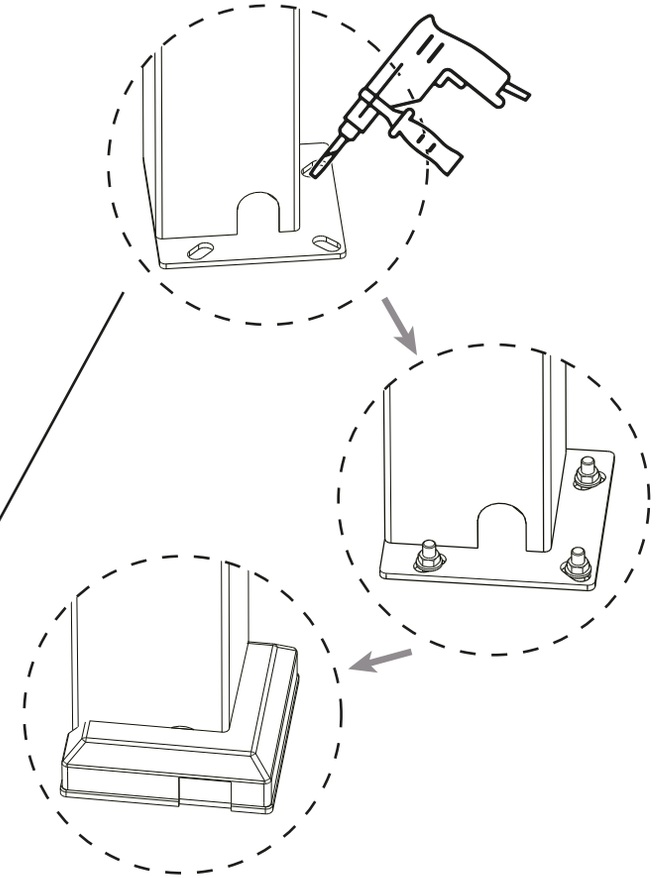

Explain:

1、Use a hammer drill to cut holes in the floor of the column base;

2、Install expansion screws;

3、Cover the post decorative cover.

Step 12 : Installation complete

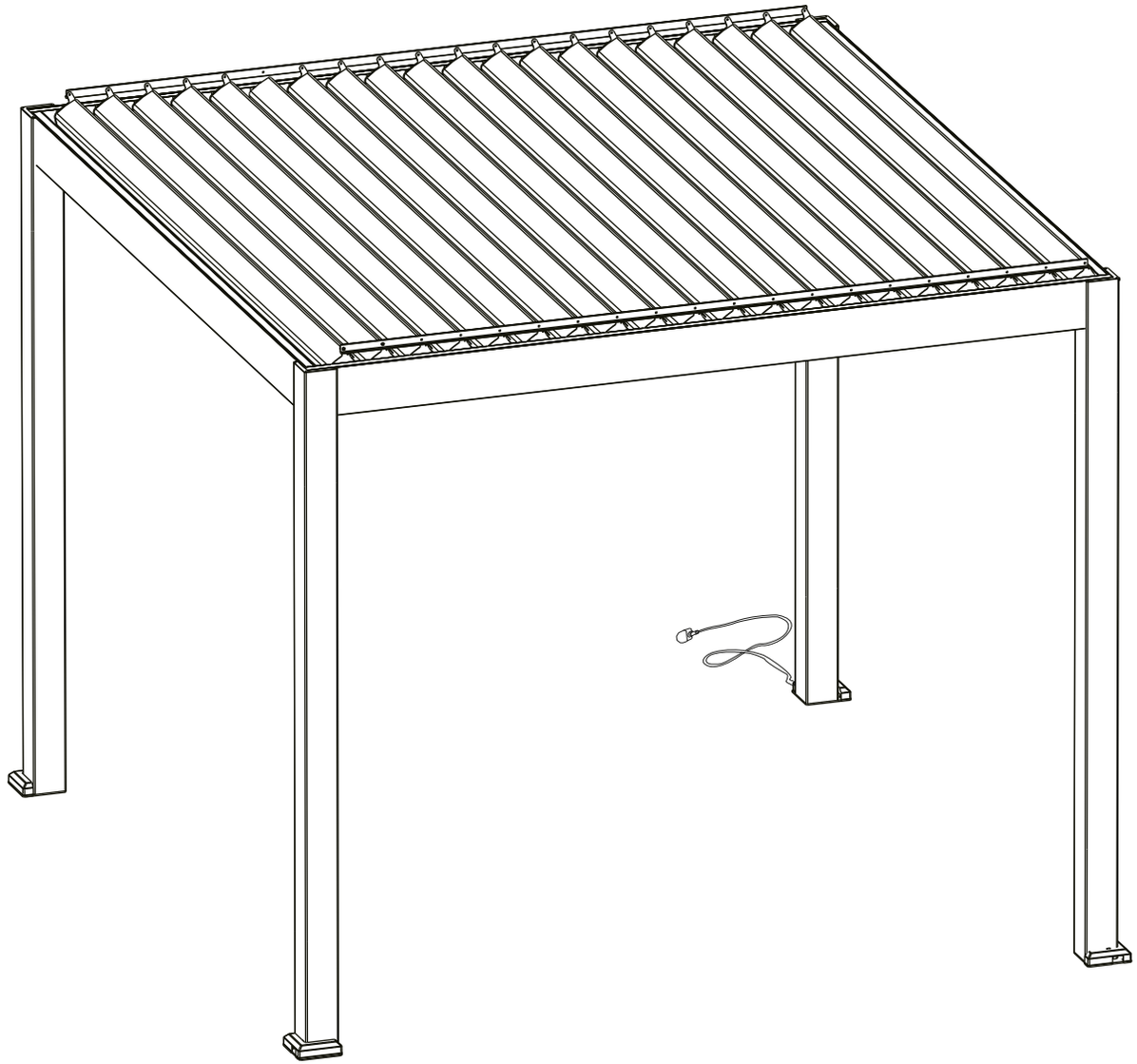

BSVillage.com

PISCINE - WELLNESS - OUTDOOR

www.bsvillage.com

BUSINESS SHOP S.r.l. a Socio Unico
Via della Repubblica n. 19/1 - 42123 Reggio Emilia (RE)
P.Iva e C.F. 02458850357 - Cap. soc. 60.000,00 € i.v.

www.bsvillage.com
0522 15 36 417
info@bsvillage.com
0522 18 40 494